Summary in Graph

Exam Summary (GO Classes CS Test Series 2026 | MOCK GATE | Test 9)

Qs. Attempted:	0 (0 + 0)	Correct Marks:	0 (0 + 0)
Correct Attempts:	0 (0 + 0)	Penalty Marks:	0 (0 + 0)
Incorrect Attempts:	0 (0 + 0)	Resultant Marks:	0 (0 + 0)

Total Questions:	65 (30 + 35)
Total Marks:	100 (30 + 70)
Exam Duration:	180 Minutes
Time Taken:	0 Minutes

Individual Question Statistics

Select Metric: Marks Obtained

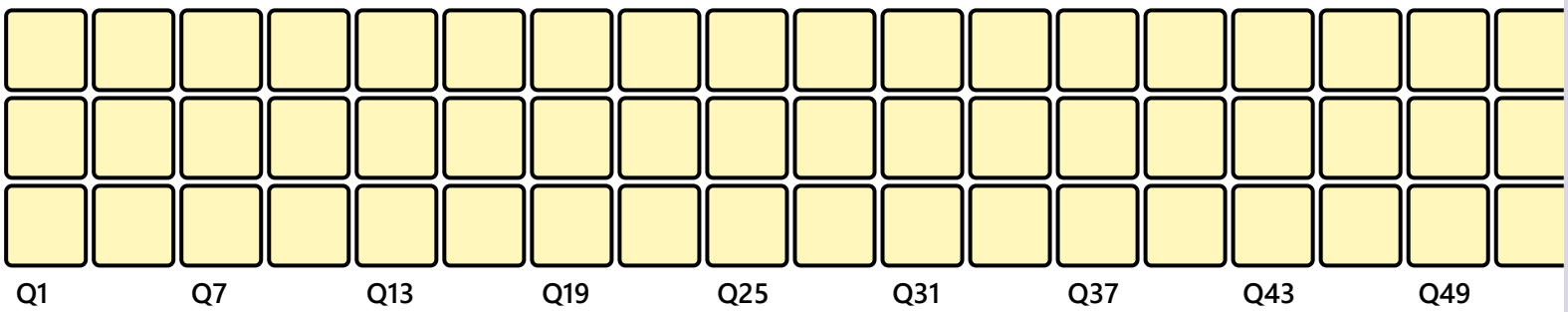

* Average Stats based on first-attempt stats of Top 10% (96) out of 962 users

EXAM RESPONSE EXAM STATS FEEDBACK

Aptitude

Q #1 Multiple Choice Type Award: 1 Penalty: 0.33 Quantitative Aptitude

Olivia cuts a 42 cm length of string into 2 cm pieces. Jeff cuts a 42 cm length of string into 3 cm pieces. How many more pieces of string does Olivia have than Jeff?

A. 7
B. 8
C. 4

D. 6

Your Answer: | Correct Answer: A | Not Attempted | Time taken: 00min 07sec | Discuss

Q #2 | Multiple Choice Type | Award: 1 | Penalty: 0.33 | Analytical Aptitude

The operation Δ is defined as $a\Delta b = a \times b + a + b$. For example, $2\Delta 5 = 2 \times 5 + 2 + 5 = 17$.
If $p\Delta 3 = 39$, the value of p is:

A. 13
B. 12
C. 9
D. 10.5

Your Answer: | Correct Answer: C | Not Attempted | Time taken: 00min 00sec | Discuss

Q #3 | Multiple Choice Type | Award: 1 | Penalty: 0.33 | Quantitative Aptitude

Last year, Lloyd ate cookies in the percentages shown in the pie chart.

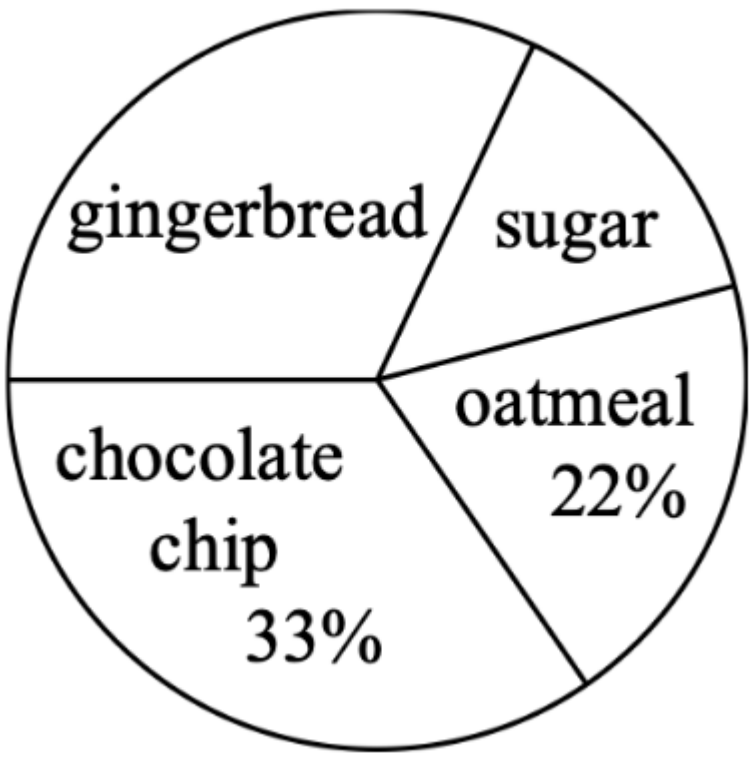

The number of gingerbread cookies that he ate was two times the number of sugar cookies that he ate. What percentage of the cookies that he ate were gingerbread cookies?

A. 25%
B. 28%
C. 30%
D. 35%

Your Answer: | Correct Answer: C | Not Attempted | Time taken: 00min 00sec | Discuss

Q #4 | Multiple Choice Type | Award: 1 | Penalty: 0.33 | Quantitative Aptitude

Two standard six-sided dice are rolled. What is the probability that the product of the two numbers rolled is 12?

A. $\frac{3}{36}$ B. $\frac{4}{36}$ C. $\frac{6}{36}$ D. $\frac{8}{36}$

Your Answer: | Correct Answer: B | Not Attempted | Time taken: 00min 00sec | Discuss

Q #5 | Multiple Choice Type | Award: 1 | Penalty: 0.33 | Verbal Aptitude

There is barely ___ food left so I'm afraid the children will have to go without ___ breakfast.

A. 'some' and 'something'
B. 'any' and 'some'
C. 'some' and 'anything'
D. 'any' and 'any'

Your Answer: | Correct Answer: D | Not Attempted | Time taken: 00min 00sec | Discuss

Q #6 | Multiple Choice Type | Award: 2 | Penalty: 0.67 | Quantitative Aptitude

A circular spinner is divided into 12 identical unshaded sections and 3 identical shaded sections, as shown.

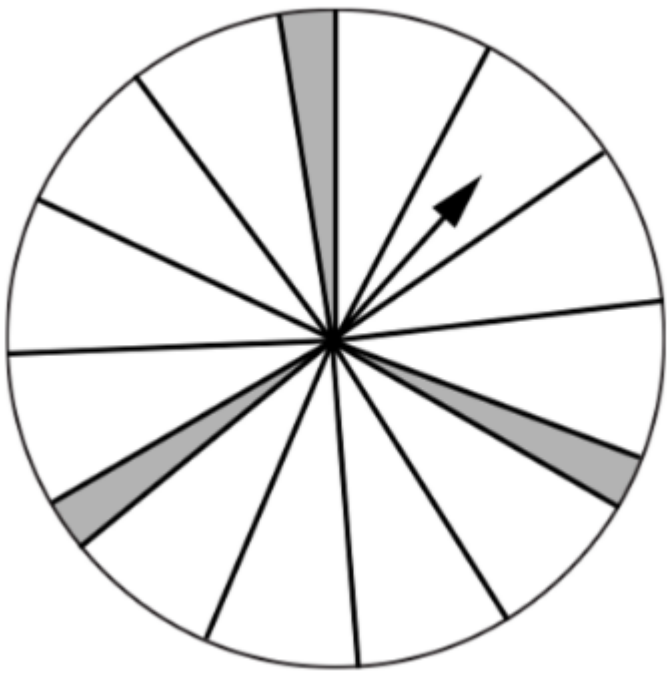

Each unshaded section is 3 times the size of each shaded section. An arrow is attached to the centre of the spinner.
The arrow is spun once. What is the probability that the arrow stops in a shaded section?

A. $1/15$
B. $1/5$
C. $1/12$
D. $1/13$

Your Answer: | Correct Answer: D | Not Attempted | Time taken: 00min 00sec | Discuss

Q #7 | Multiple Choice Type | Award: 2 | Penalty: 0.67 | Quantitative Aptitude

Exactly 120 tickets were sold for a concert. The tickets cost $12 each for adults, $\$10$ each for seniors, and $\$6$ each for children. The number of adult tickets sold was equal to the number of child tickets sold. Given that the total revenue from the ticket sales was $\$1100$, the number of senior tickets sold was

A. 110
B. 20
C. 40
D. 2

Your Answer: | Correct Answer: B | Not Attempted | Time taken: 00min 00sec | Discuss

Q #8 | Multiple Choice Type | Award: 2 | Penalty: 0.67 | Quantitative Aptitude

Raja uses coins with the following values:

Coin	Value
Blue Coin	64
Green Coin	32
Orange Coin	16
Red Coin	8
Yellow Coin	4
White Coin	2
Black Coin	1

Which of the following total values can be made using exactly **four different coins**?

A. 100
B. 78
C. 84
D. 69

Your Answer: | Correct Answer: B | Not Attempted | Time taken: 00min 00sec | Discuss

Q #9 | Multiple Choice Type | Award: 2 | Penalty: 0.67 | Quantitative Aptitude

The series below includes the consecutive even integers from 2 to 2022 inclusive, where the signs of the terms alternate between positive and negative:

$$S = 2 - 4 + 6 - 8 + 10 - \cdots - 2016 + 2018 - 2020 + 2022$$

What is the value of S ?

A. 2025
B. 1012
C. 2024
D. -1010

Your Answer: | Correct Answer: B | Not Attempted | Time taken: 00min 00sec | Discuss

Q #10 | Multiple Choice Type | Award: 2 | Penalty: 0.67 | Verbal Aptitude

Select the word-pair that best represents a similar relationship to the one expressed in the pair of words given below.
Acquired : Received

A. Bitter : Sweet
B. Collected : Distributed
C. Arrival : Departure
D. Tiny : Small

Your Answer: | Correct Answer: D | Not Attempted | Time taken: 00min 00sec | Discuss

Technical

Q #1 | Multiple Choice Type | Award: 1 | Penalty: 0.33 | Databases

Consider two relations:

$$R(\underline{A, B}, C), S(C, \underline{D})$$

AB is the key in R, and D is the key in S.

For the SQL query below, what is the key of the query's answer?

```
select  R.A, R.B, R.C, S.D
from R, S
where R.C = S.C and R.A =20;
```

A. AB
B. CD
C. ABD
D. BD

Your Answer: | Correct Answer: D | Not Attempted | Time taken: 00min 00sec | Discuss

Q #2 | Multiple Choice Type | Award: 1 | Penalty: 0.33 | Databases

Consider the following schedule.

```
r1(X), r2(X), r3(X), r1(Y), w2(Z), r3(Y), w3(Z), w3(Y)
```

Recall that a schedule $S1$ is conflict-equivalent to another schedule $S2$ if $S2$ can be obtained from $S1$ by swapping adjacent non-conflicting actions.

Which of the following statements is true for the above schedule?

A. This schedule is serial.
B. This schedule is conflict-equivalent to (T2, T3, T1).
C. This schedule is conflict-equivalent to (T2, T1, T3).
D. This schedule is not conflict-equivalent to any serial schedule.

Your Answer: | Correct Answer: C | Not Attempted | Time taken: 00min 00sec | Discuss

Q #3 | Multiple Choice Type | Award: 1 | Penalty: 0.33 | Digital Logic

Among the given options, the simplified form of the Boolean function $F = (A + \overline{A} \cdot B) + \overline{A} \cdot (A + \overline{B}) \cdot C$ is

A. $A + B + C$
B. $A.B.C$
C. $B + A.C$
D. $\bar{A} + B.C$

Your Answer: | Correct Answer: A | Not Attempted | Time taken: 00min 00sec | Discuss

Q #4 | Multiple Choice Type | Award: 1 | Penalty: 0.33 | Programming in C

Consider the following expression:

```
!(n > 11 && n <= 22)
```

The expression above is equivalent to which one of the following?

A.
```
n < 11 || n >= 22
```

B.
```
n <= 11 || n > 22
```

C.
```
n > 11 || n <= 22
```

D.
```
n < 11 && n >= 22
```

Your Answer: | Correct Answer: B | Not Attempted | Time taken: 00min 00sec | Discuss

Q #5 | Multiple Choice Type | Award: 1 | Penalty: 0.33 | Algorithms

Let n be a positive integer.
Consider the two statements below:

- S1: If $f(n) > g(n)$ for all n then $g(n)$ is ALWAYS o($f(n)$). where o is small-oh.
- S2: If $f(n) < g(n)$ for all n then $f(n)$ is ALWAYS o($\mathrm{g}(n)$). where o is small-oh.

Which of the following is the correct option?

A. $\mathrm{S1}$ is correct but $\mathrm{S2}$ is incorrect
B. $\mathrm{S1}$ is incorrect but $\mathrm{S2}$ is correct
C. Both are correct
D. Both are incorrect

Your Answer: | Correct Answer: D | Not Attempted | Time taken: 00min 00sec | Discuss

Q #6 | Multiple Choice Type | Award: 1 | Penalty: 0.33 | Algorithms

Let $\mathrm{G} = (\mathrm{V}, \mathrm{E})$ be a connected, undirected graph with edge weights $w : \mathrm{E} \rightarrow \mathbb{Z}$. Suppose G has a unique minimum spanning tree. What can you conclude about G?

A. G contains no cycles
B. G contains at most one cycle
C. All edge weights are different
D. None of the above

Your Answer: | Correct Answer: D | Not Attempted | Time taken: 00min 00sec | Discuss

Q #7 Multiple Select Type | Award: 1 | Penalty: 0 | Algorithms

Consider the following statements about the complexity of finding an element in a sorted array using binary search and properties of asymptotic notation.
Which of the following is/are correct?

A. In the worst case, finding an element in a sorted array using binary search is $O(n)$.
B. In the worst case, finding an element in a sorted array using binary search is $\Omega(n)$.
C. If a function is in $\Omega(n)$, then it could also be in $O\left(n^2\right)$.
D. If a function is in $\Omega(n)$, then it is always in $O(n)$.

Your Answer: | Correct Answer: A;C | Not Attempted | Time taken: 00min 00sec | Discuss

Q #8 Numerical Type | Award: 1 | Penalty: 0 | Algorithms

Given n sandpiles of weights $w_1, \ldots, w_n$ on a line, we want to merge them all with minimal cost. At each step, we can only merge adjacent sandpiles, with a cost equal to the weight of the merged sandpile, which then replaces the two piles. What is the minimum cost of merging the four piles with weights $(100, 1, 1, 100)$? Notice that, finally, there should be just one pile out of these 4 piles.

Your Answer: | Correct Answer: 306 | Not Attempted | Time taken: 00min 00sec | Discuss

Q #9 Multiple Select Type | Award: 1 | Penalty: 0 | Algorithms

Consider the following unsorted array, and the array after an unknown number of iterations of selection sort (where we sort by identifying the minimum item and moving it to the front by swapping). Assume no two elements are equal.

Unsorted:

After ? Iterations of Selection Sort:

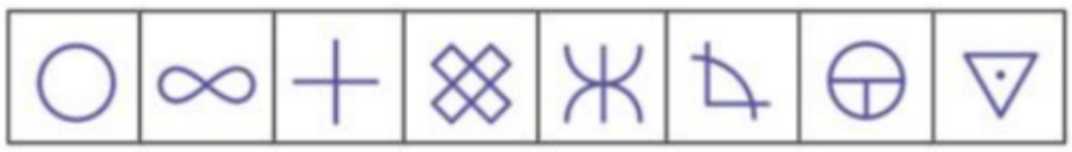

Which of the following is necessarily the correct relation <, or > between objects?

A. 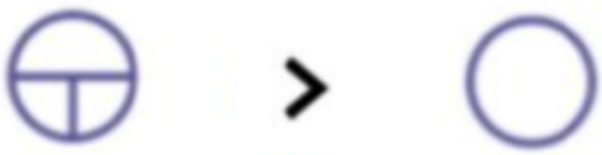

B.

C.

D.

Your Answer: | Correct Answer: A;B;D | Not Attempted | Time taken: 00min 00sec | Discuss

Q #10 Numerical Type | Award: 1 | Penalty: 0 | Data Structures

If the largest value in a max-heap is in the root node and the second-largest value is in the root's right child, what will be the number of positions where the third-largest value can be put? Assume all values are distinct.

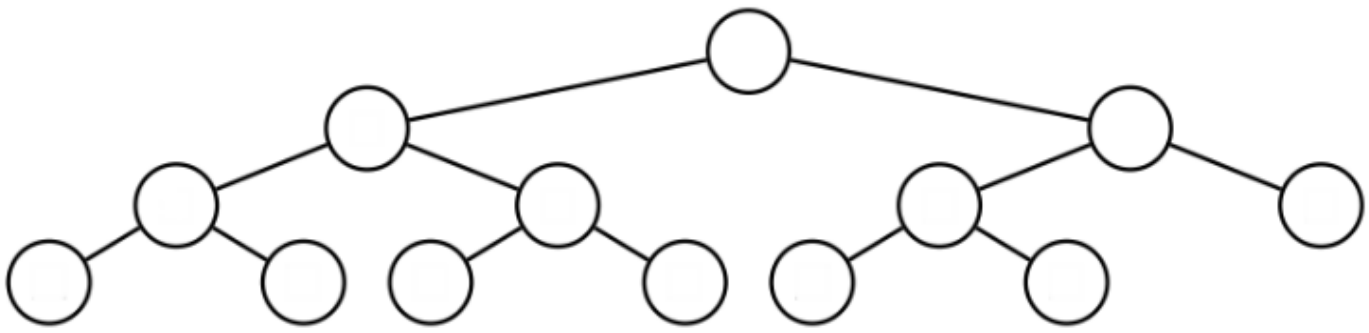

Your Answer: | Correct Answer: 3 | Not Attempted | Time taken: 00min 00sec | Discuss

Q #11 Multiple Select Type | Award: 1 | Penalty: 0 | Data Structures

Consider a binary search tree (BST) and a binary heap containing 15 nodes. Determine the minimum and maximum heights for both data structures.

A. The minimum height of the BST is 3.
B. The maximum height of the BST is 14.
C. The minimum height of the binary heap is 3.
D. The maximum height of the binary heap is 3.

Your Answer: | Correct Answer: A;B;C;D | Not Attempted | Time taken: 00min 00sec | Discuss

Q #12 Multiple Choice Type | Award: 1 | Penalty: 0.33 | Compiler Design

Consider the following process for computing the FIRST set of a nonterminal X in a grammar:

If $X \rightarrow Y_1 Y_2 Y_3 \ldots Y_k$, where each Y_k is a single terminal or nonterminal or ε.

Which of the following correctly describes the conditions under which ε is added to FIRST(X)?

A. ε is added if $\mathrm{FIRST}(\mathrm{Y}_1)$ contains ε.
B. ε is added only if ε is in $\mathrm{FIRST}(\mathrm{Y}_1)$ and not in $\mathrm{FIRST}(Y_2)$.
C. ε is added if ε is in $\mathrm{FIRST}(Y_i)$ for every $1 \leq \mathrm{i} \leq \mathrm{k}$.
D. ε is added if at least one Y_i has ε in its FIRST set.

Your Answer: | Correct Answer: C | Not Attempted | Time taken: 00min 00sec | Discuss

Q #13 Numerical Type | Award: 1 | Penalty: 0 | Compiler Design

Consider the following Syntax Directed Translation Scheme -

$$
\begin{array}{ll}
F \rightarrow .L & \{F.v = L.v\} \\
L \rightarrow L_1 B & \{L.l = L_1 \cdot l + 1, \\
 & L.v = L_1 \cdot v + 2^{-L.l} \cdot B.v\} \\
L \rightarrow B & \{L.l = 1, L \cdot v = B.v/2\} \\
B \rightarrow 0 & \{B.v = 0\} \\
B \rightarrow 1 & \{B.v = 1\}
\end{array}
$$

On input $.101$, what will be the final value of $F.v$ for the shift-reduce parser?

Your Answer: | Correct Answer: 0.625 | Not Attempted | Time taken: 00min 00sec | Discuss

Q #14 Numerical Type | Award: 1 | Penalty: 0 | Operating System

Consider a system with a 6-bit virtual address space and 8-byte pages/frames. The mapping from virtual page numbers to physical frame numbers of a process is as follows:

Page Number	Frame Number
0	2
1	5
2	7
3	3

Convert the virtual address = 10 into its corresponding physical address (decimal value). All addresses are provided in decimal format.

Your Answer: | Correct Answer: 42 | Not Attempted | Time taken: 00min 00sec | Discuss

Q #15 Numerical Type | Award: 1 | Penalty: 0 | Operating System

Consider a file system with 2048-byte blocks and a 32-bit disk. Assume that one terabyte equals 2^{40} bytes. How large of a disk (in terabytes) can this file system support?

Your Answer: | Correct Answer: 8 | Not Attempted | Time taken: 00min 00sec | Discuss

Q #16 Multiple Choice Type | Award: 1 | Penalty: 0.33 | Operating System

Following code uses TestAndSet instruction which is atomic hardware supported instruction. TestAndSet(X) returns the old value of X and sets X to 1.

There are two processes sharing a common variable mutex (initialised to 0) and runs identical code given below.

```
do{
    while(TestAndSet(mutex));
    // Critical section
    mutex = 0;
    // Remainder section
}while (TRUE);
```

Which of the condition is NOT satisfied by above code?

A. Mutual Exclusion
B. Progress
C. Bounded Waiting

D. None of these

Your Answer: | Correct Answer: C | Not Attempted | Time taken: 00min 00sec | Discuss

Q #17 | Numerical Type | Award: 1 | Penalty: 0 | Operating System

The following pair of processes share a common variable X :

```
Process A          Process B
    int Y;             int Z;
    wait(S);           wait(S);
A1: Y = X*2;       B1: Z = X+1;
A2: X = Y;         B2: X = Z;
    signal(S);         signal(S);
```

X is set to 5 before either process begins execution. As usual, statements within a process are executed sequentially, but statements in process A may execute in any order with respect to statements in process B.

S is set to 1 before either process begins execution. Now, how many different values of X are possible after both processes finish executing?

Your Answer: | Correct Answer: 2 | Not Attempted | Time taken: 00min 00sec | Discuss

Q #18 | Multiple Choice Type | Award: 1 | Penalty: 0.33 | Computer Networks

Consider the following network of routers arranged in a complete binary tree with all levels filled:

- The root node R(level 0) is the sender of a packet.
- All leaf nodes (at level L) are interested in receiving the packet.

Suppose R sends the data using separate unicast to each of the leaf nodes.

Each forward along an edge is counted as one packet forward. For example, if R sends a packet to leaf A, the forward from R to x, from x to w, and from w to z are counted as separate forwards.

What is the **total number of packet forwards** that occur for all leaf nodes, assume there are at least 10 levels (i.e. $\mathrm{L} \geq 10$)?

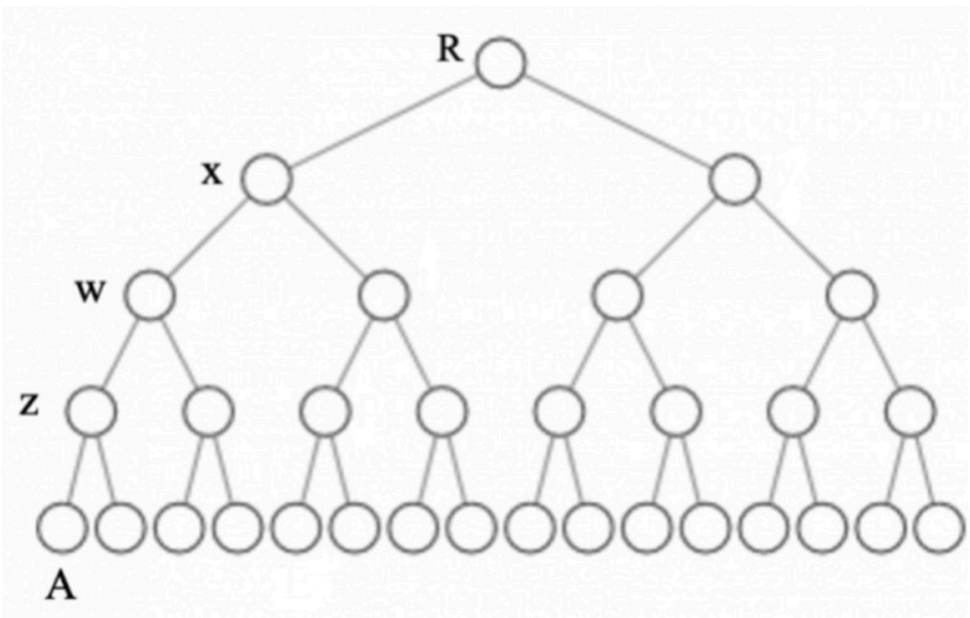

A. $2^{\mathrm{L}+1}-2$
B. $\mathrm{L} * 2^{\mathrm{L}}$
C. $2^{\mathrm{L}+1}$

D. $L * 2^L - 1$

Your Answer: | Correct Answer: B | Not Attempted | Time taken: 00min 00sec | Discuss

Q #19 | Multiple Select Type | Award: 1 | Penalty: 0 | Computer Networks

Consider the following topology, where a node labeled with N denotes an end system, H denotes a hub, S denotes a switch and R denotes a router:

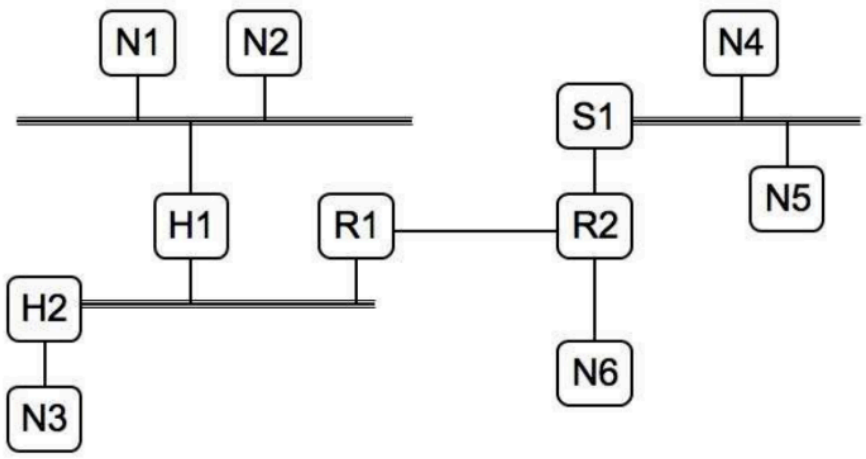

All links are Ethernet.

When the frame holding the packet arrives at N5, which of the following statements is/are CORRECT?

A. The Ethernet MAC addresses will be different at N5 than at N1.
B. IP checksum at N5 will be different from that in the packet when sent by N1.
C. TCP checksum at N5 will be different from that in the packet when sent by N1.
D. The source IP address will remain the same at N5 as it was at N1 .

Your Answer: | Correct Answer: A;B;D | Not Attempted | Time taken: 00min 00sec | Discuss

Q #20 | Numerical Type | Award: 1 | Penalty: 0 | Computer Networks

Suppose two hosts are about to open a TCP connection. The TCP headers used in the communication are only 20 bytes long and regular (no-options) IPv4 is being used for Layer 3. If the MTU of the link is 1260 bytes, what is the MSS?

Your Answer: | Correct Answer: 1220 | Not Attempted | Time taken: 00min 00sec | Discuss

Q #21 | Multiple Choice Type | Award: 1 | Penalty: 0.33 | CO & Architecture

Consider a cache that holds two blocks of 1 byte each. The distinct addresses $A_1, A_2, A_3, \ldots$ map to the first block, and the distinct addresses $B_1, B_2, B_3, \ldots$ map to the second block of a direct-mapped cache.

Which of the following sequences has a **strictly better hit rate** on a **direct-mapped cache** than on a **fully-associative cache** using LRU? Let H_{DM} and H_{FA} represent the hit rates for the directmapped and fully-associative caches respectively. Find the sequence where $H_{\mathrm{DM}} > H_{\mathrm{FA}}$.

A. A_1, B_1, B_2, A_1
B. A_1, A_2, A_1, A_2
C. A_1, B_1, A_2, B_2
D. A_1, B_2, A_1, B_1

Your Answer: | Correct Answer: A | Not Attempted | Time taken: 00min 00sec | Discuss

Q #22 Multiple Choice Type | Award: 1 | Penalty: 0.33 | Calculus

Which statement accurately describes the function

$$f(x) = x^4 - 6x^3$$

on the interval $(0, 3)$?

A. f is increasing and its graph is concave up.
B. f is decreasing and its graph is concave up.
C. f is increasing and its graph is concave down.
D. f is decreasing and its graph is concave down.

Your Answer: | Correct Answer: D | Not Attempted | Time taken: 00min 00sec | Discuss

Q #23 Multiple Choice Type | Award: 1 | Penalty: 0.33 | Linear Algebra

Let $\mathbf{x} = \begin{bmatrix} 1 \\ -2 \\ 5 \end{bmatrix}$ and $\mathbf{v} = \begin{bmatrix} -7 \\ 4 \\ 2 \end{bmatrix}$. Which of the following statements must be true?

I. $A = \begin{bmatrix} -7 & 0 & 0 \\ 4 & 0 & 0 \\ 2 & 0 & 0 \end{bmatrix}$ is of rank 1 such that $A\mathbf{x} = \mathbf{v}$.

II. $A = \begin{bmatrix} -7 & 0 & 0 \\ 0 & -2 & 0 \\ 0 & -1 & 0 \end{bmatrix}$ is of rank 2 such that $A\mathbf{x} = \mathbf{v}$.

III. $A = \begin{bmatrix} -7 & 0 & 0 \\ 0 & -2 & 0 \\ 0 & 0 & 2/5 \end{bmatrix}$ is of rank 3 such that $A\mathbf{x} = \mathbf{v}$.

A. Only I
B. Only II
C. Only III
D. I, II, III

Your Answer: | Correct Answer: D | Not Attempted | Time taken: 00min 00sec | Discuss

Q #24 Numerical Type | Award: 1 | Penalty: 0 | Graph Theory

A simple undirected graph has 24 vertices and 30 edges. It has five vertices of degree 4 , seven pendant vertices, and seven vertices of degree 2 . All other vertices have degree 3 or 4 . How many vertices of degree 4 are there?

Your Answer: | Correct Answer: 9 | Not Attempted | Time taken: 00min 00sec | Discuss

Q #25 Numerical Type | Award: 1 | Penalty: 0 | Theory of Computation

Consider the following grammar:

$$\begin{aligned} \mathrm{S} &\rightarrow \mathrm{AAAAA} \\ \mathrm{A} &\rightarrow \mathrm{b} \mid \mathrm{c} \end{aligned}$$

How many derivations does the string "bbbbb" have?

Your Answer: | Correct Answer: 120 | Not Attempted | Time taken: 00min 00sec | Discuss

Q #26 Multiple Choice Type | Award: 2 | Penalty: 0.67 | Databases

Consider the following statements in the context of relational database models.

A: If a relation R is in $3NF$ but not in BCNF then R has a nontrivial functional dependency $\mathrm{X} \rightarrow \mathrm{Y}$, where X is a proper subset of a candidate key and Y is a proper subset of a different candidate key.

B:For all sets of functional dependencies F and $G, F^{+} \cup G^{+} = (F \cup G)^{+}$.

Which of the above statements is/are TRUE?

A. Only A
B. Only B
C. Both A and B
D. None

Your Answer: | Correct Answer: D | Not Attempted | Time taken: 00min 00sec | Discuss

Q #27 Multiple Select Type | Award: 2 | Penalty: 0 | Databases

Consider four relations with the following schemas:

$$R(A, B), R2(A, B), S(C, D), V(G, H, K)$$

Which of the following identities hold in the Relational Algebra?

(Assume set semantics for all operators)

A. $(R - R2) - R2 = R$
B. $((\mathrm{R} - \mathrm{R2}) - \mathrm{R2}) - \mathrm{R2} = \mathrm{R} - \mathrm{R2}$
C. $\Pi_A (R \bowtie_{B=C} S) = \Pi_A(R)$
D. $\Pi_{AB} (R \bowtie_{B=C} S) - R2 = \Pi_{AB} ((R - R2) \bowtie_{B=C} S)$

Your Answer: | Correct Answer: B;D | Not Attempted | Time taken: 00min 00sec | Discuss

Q #28 Multiple Choice Type | Award: 2 | Penalty: 0.67 | Databases

Consider the following schedule involving two transactions $T1$ and $T2$:

1. $T1$ requests a lock on resource R, and the lock is granted.
2. $T2$ requests a lock on resource R, which is held by $T1$.

Assume the timestamp of $T1$ is smaller (older) than the timestamp of $T2$. Based on the "Wait-Die" and "Wound-Wait" deadlock prevention schemes, what happens in this scenario?

A. In both schemes, $T2$ waits for $T1$ to release the lock.
B. In "Wait-Die," $T2$ is aborted, while in "Wound-Wait," $T1$ is aborted.
C. In "Wait-Die," T2 is aborted, while in "Wound-Wait," $T2$ waits for $T1$.
D. In "Wait-Die," $T2$ waits for $T1$, while in "Wound-Wait," $T1$ is aborted.

Your Answer: | Correct Answer: C | Not Attempted | Time taken: 00min 00sec | Discuss

Q #29 | Multiple Choice Type | Award: 2 | Penalty: 0.67 | CO & Architecture

Consider the following program segment:

```
if A > B then
    V[i] := F(i)
else
    if B > C then
        V[i] := G(i)
```

Assume that the values of the Boolean expressions "$A > B$" and "$B > C$" are independent and that, on the average, $A > B, 75$ percent of the time and $B > C, 25$ percent of the time. If the program segment above is executed $10,000$ times, how many times would one expect the functions F and G to be executed?

A. $F : 2,500, G : 18,750$
B. $F : 7,500, G : 625$
C. $F : 7,500, G : 1,875$
D. $F : 7,500, G : 2,500$

Your Answer: | Correct Answer: B | Not Attempted | Time taken: 00min 00sec | Discuss

Q #30 | Multiple Choice Type | Award: 2 | Penalty: 0.67 | CO & Architecture

Suppose that V is a vector with indices from a to b and that each element of V occupies two words. If the elements of V are stored in consecutive words of memory and $\alpha V[a]$ is the address of word 1 of $V[a]$, then the address of word 1 of $V[i]$, where $a \leq i \leq b$, is

A. $(\alpha V[a] - a) + i$
B. $2(\alpha V[a] - a) + 2i$
C. $(\alpha V[a] - 2a) + 2i$
D. $(\alpha V[a] - 2a) + i$

Your Answer: | Correct Answer: C | Not Attempted | Time taken: 00min 00sec | Discuss

Q #31 | Numerical Type | Award: 2 | Penalty: 0 | CO & Architecture

Consider an unpipelined processor. Assume that it has 1-ns clock cycle and that it uses 4 cycles for ALU operations and 5 cycles for branches and 4 cycles for memory operations. Assume that the relative frequencies of these operations are $50\%, 35\%$ and 15% respectively. Suppose that due to clock skew and set up, pipelining the processor adds 0.15 ns of overhead to the clock. Ignoring any latency impact, how much speed up in the instruction execution rate will we gain from a pipeline? (up to 2 decimal points)

Your Answer: | Correct Answer: 3.77:3.79 | Not Attempted | Time taken: 00min 00sec | Discuss

Q #32 | Multiple Choice Type | Award: 2 | Penalty: 0.67 | CO & Architecture

Consider a computer system with 4 GB memory and 1 MB cache with 256-byte line size.
If the memory read from address 0x87651234 was a cache miss, what are the range of byte addresses in Hexadecimal) that will be transferred to the cache?

A. 0x87751200-0x877512ff
B. 0x87651200-0x876513ff
C. 0x87651200-0x876512ff
D. 0x87652200-0x876522ff

Your Answer: | Correct Answer: C | Not Attempted | Time taken: 00min 00sec | Discuss

Q #33 | Multiple Choice Type | Award: 2 | Penalty: 0.67 | CO & Architecture

Consider the instructions in the 8085 microprocessor.

1. ADD B:- The content of operand register B is added to the content of the accumulator and the result is stored in the accumulator.
2. ADI:- Add Immediate means add an immediate value to the content of accumulator and the result is stored in accumulator.

In the following program, "A" is the accumulator, and "B" is a register.

For 8085 microprocessor, the following program is executed.

```
        MVI A, 05H;
        MVI B, 05H;
PTR:    ADD B; DCR B; // DCR R decrements the value of R by 1.
        JNZ PTR; // Jump to PTR if Zero Flag is not set.
        ADI 03H;
        HLT; // Program Ends
```

At the end of program, accumulator contains

A. 17H
B. 20H
C. 23H
D. 05H

Your Answer: | Correct Answer: A | Not Attempted | Time taken: 00min 00sec | Discuss

Q #34 | Multiple Choice Type | Award: 2 | Penalty: 0.67 | Digital Logic

Assume a floating-point number format similar to IEEE-754 but consisting of only 8 bits, with 3 bits reserved for the exponent. If the exponent 000 leads to a true 0.0 value regardless of the significand, and the exponent 111 encodes infinity or a NaN value depending on the significand. What is the largest finite decimal value that can be encoded in the 8-bit floating point encoding?

A. 1.9375
B. 7.75
C. 15.5
D. 31.0

Your Answer: | Correct Answer: C | Not Attempted | Time taken: 00min 00sec | Discuss

Q #35 | Multiple Choice Type | Award: 2 | Penalty: 0.67 | Digital Logic

In the figure shown, the positive edge triggered D flip-flops are initially reset to $Q = 0$. The logic gates and the multiplexers have no propagation delay. After reset, a train of clock pulses (CLK) are applied. The logic-states of the inputs DIN, S and the clock pulses are also shown in the figure. Assuming no timing violations, the sequence of output Y from the 3rd clock to the 5th clock, $Y_3Y_4Y_5$ is _____.

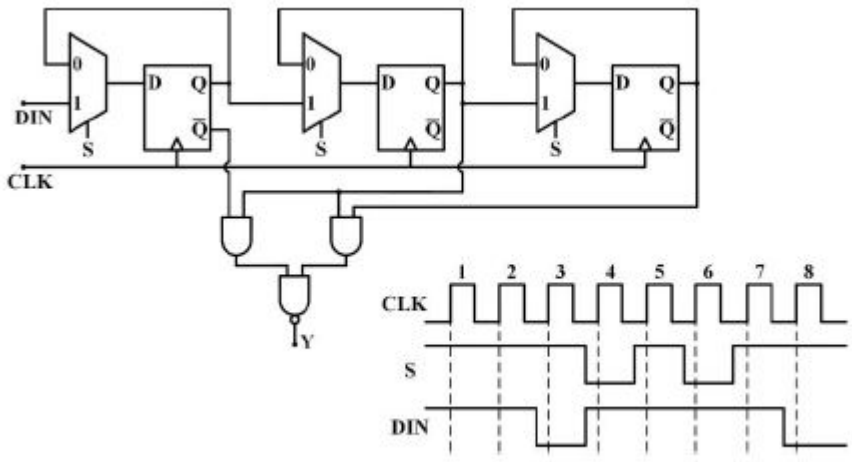

A. 001
B. 010
C. 000
D. 011

Your Answer: | Correct Answer: A | Not Attempted | Time taken: 00min 00sec | Discuss

Q #36 | Multiple Select Type | Award: 2 | Penalty: 0 | Programming in C

Consider below four program fragments. Which of the program(s) is/are likely to produce run time error or memory leak. Assume malloc is always successful, and sizes are as follows -

```
sizeof(int *) = 8 bytes
sizeof(double) = 8 bytes
sizeof(char) = 1 byte
sizeof(int) = 4 byte
```

```
Program 1
int *array = malloc(n);
for (int i=0; i<n; i+=1) array[i]=i*i;
```

```
Program 2
struct p { double x; double y; };
struct p *array = malloc(n * sizeof(struct p *));
for (int i=0; i<n; i+=1) array[i].x=2.3
```

```
Program 3
int *p = malloc(sizeof(int));
*p = 42;
p = malloc(sizeof(int));
5. free(p);
```

```
Program 4
void populate(int *a)
{
    int *parray = malloc(2 * sizeof(int));
    parray[0] = 37;
    parray[1] = 73;
    a = parray;

}

int main()
{
    int *a = NULL;
    populate(a);
    printf("a[0] = %d and a[1] = %d\n", a[0], a[1]);
    return 0;
}
```

A. Program 1
B. Program 2
C. Program 3
D. Program 4

Your Answer: | Correct Answer: A;B;C;D | Not Attempted | Time taken: 00min 00sec | Discuss

Q #37 | Numerical Type | Award: 2 | Penalty: 0 | Programming in C

```
int find(int n) {

    int i, j, k, a = 1;

    for (i = 1; i <= n; i++)

        for (j = 1; j <= i; j++)

            for (k = 1; k <= j; k++)

                a = a + 1;

    return a;
}
```

What will be the value of find(10)?

Your Answer: | Correct Answer: 221 | Not Attempted | Time taken: 00min 00sec | Discuss

Q #38 | Multiple Choice Type | Award: 2 | Penalty: 0.67 | Programming in C

What will be the output of the following C program?

```
#include<stdio.h>
void main()
{
    int a =0;
    int b = (a-- ? a++: a ? a++ : a-- );
    printf("%d", b);
}
```

A. 0
B. -1

C. -2
D. 2

Your Answer: | Correct Answer: B | Not Attempted | Time taken: 00min 00sec | Discuss

Q #39 | Multiple Choice Type | Award: 2 | Penalty: 0.67 | Algorithms

Consider two strings $\mathrm{A} =$ "abcca" and $\mathrm{B} =$ "abacbcaa". Let x be the length of the longest common subsequence (not necessarily contiguous) between A and B and let y be the number of such longest common subsequences between A and B. Then $x + 100y =$ _____.

A. 304
B. 305
C. 501
D. 105

Your Answer: | Correct Answer: D | Not Attempted | Time taken: 00min 00sec | Discuss

Q #40 | Multiple Choice Type | Award: 2 | Penalty: 0.67 | Algorithms

An integer array A is $\boldsymbol{k}$**-even-mixed** if there are exactly k even integers in A, and the odd integers in A appear in sorted order. Given a k-even-mixed array A containing n distinct integers for $k = \lceil n/\lg n \rceil$, Let $O\left(n^a(\log n)^b\right)$ be tightest bound to sort A. What will be the values of a and b?

A. $a = 1, b = 1$
B. $a = 1, b = 0$
C. $a = 0, b = 1$
D. $a = 1, b = -1$

Your Answer: | Correct Answer: B | Not Attempted | Time taken: 00min 00sec | Discuss

Q #41 | Multiple Choice Type | Award: 2 | Penalty: 0.67 | Data Structures

Consider a function ReverseList() which has following protype -

```
Node *ReverseList(Node *p)
```

Function reverse the nodes in a given linked list.

That is, head = ReverseList(head); will take a list held by head, reverse it and put back to head.

```
Node * ReverseList(Node * p) {
    if (!p) return NULL;
    if (p -> next) {
        Node * q = ReverseList(p -> next);
        p -> next -> next = p;
        p -> next = 0;
        return ______; //Line X
    }
    return ______; //Line Y
}
```

Fill in the blanks for Line X and Line Y. If we say Line X is filled by p then we consider Line X as **return p;** after filling the blank.

Line X and Line Y should be filled by which values respectively such that the function correctly reverses the given linked list.

A. p and $p \rightarrow$ next
B. p and q
C. $q \rightarrow$ next and p
D. q and p

Your Answer: | Correct Answer: D | Not Attempted | Time taken: 00min 00sec | Discuss

Q #42 | Multiple Select Type | Award: 2 | Penalty: 0 | Compiler Design

Which of the following is/are true about Bottom-up parsing using stack?

A. If there is NO handle on the top of stack, then any Bottom-up parser will always shift the terminal.
B. If there is a handle on the top of stack, then any Bottom-up parser will always reduce the top of stack content to some non-terminal
C. A conflict (Shift-reduce or Reduce-reduce) implies that parser does not know handle at the corresponding stage of parsing.
D. Bottom-up parsers construct a leftmost derivation in reverse by reducing handles in the input.

Your Answer: | Correct Answer: C | Not Attempted | Time taken: 00min 00sec | Discuss

Q #43 | Multiple Choice Type | Award: 2 | Penalty: 0.67 | Operating System

Two processes, A and B , each need three records, 1,2 , and 3 , in a database. If A asks for them in the order $1, 2, 3$, and B asks for them in the same order, deadlock is not possible. However, if B asks for them in the order 3, 2, 1, then deadlock is possible. With three resources, there are 3! $= 6$ possible combinations each process can request resources. What fraction of all combinations is guaranteed to be deadlock-free?

A. $1/3$
B. $1/2$
C. $2/3$
D. $1/6$

Your Answer: | Correct Answer: A | Not Attempted | Time taken: 00min 00sec | Discuss

Q #44 | Multiple Choice Type | Award: 2 | Penalty: 0.67 | Operating System

Given the following processes and their arrival and CPU running times:

Process ID	Arrival Time	CPU Running Time
Process A	0	2
Process B	1	5
Process C	4	1
Process D	6	4

Assume **Round Robin (RR)** scheduling with a time slice (quantum) of 1, and no context switch overhead.
New processes are added to the end of the queue upon arrival.
What are the finish times for each process under Round Robin scheduling?

A. A: 2, B: 11, C: 5, D: 10
B. A: 3, B: 10, C: 5, D: 12

C. A: 2, B: 11, C: 6, D: 13
D. A: 2, B: 12, C: 6, D: 10

Your Answer: | Correct Answer: B | Not Attempted | Time taken: 00min 00sec | Discuss

Q #45 | Multiple Choice Type | Award: 2 | Penalty: 0.67 | Computer Networks

TCP connection termination using three-way handshaking is shown below.

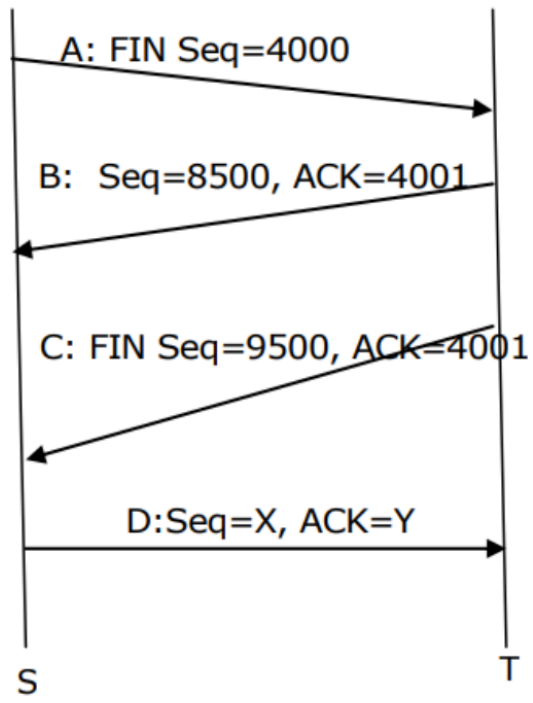

Consider the following statements about this termination:

I. Between B and C, both-way communication(data transfer) is possible.
II. Between B and C, T can still send data if T wants but S can't.
III. X's value is 4000.
IV. Y's value is 9500.

Which of the above statements is/are true?

A. II only
B. I, III, and IV only
C. I and II only
D. II, III, and IV only

Your Answer: | Correct Answer: A | Not Attempted | Time taken: 00min 00sec | Discuss

Q #46 | Multiple Choice Type | Award: 2 | Penalty: 0.67 | Computer Networks

During transmission over a certain binary communication channel, bit errors occur independently with probability p. The probability of $\mathrm{AT\ MOST}$ one bit in error in a block of n bits is given by

A. p^n
B. $1-p^n$
C. $np(1-p)^{n-1}+(1-p)^n$
D. $1-(1-p)^n$

Your Answer: | Correct Answer: C | Not Attempted | Time taken: 00min 00sec | Discuss

Q #47 | Multiple Choice Type | Award: 2 | Penalty: 0.67 | Probability

Your friend gives you a coin, and you are considering two hypotheses:

- $\mathbf{H}_1$: "It is a normal coin with an equal chance of landing heads or tails."
- $\mathbf{H}_2$: "It is a special coin where both sides are tails."

Your prior probabilities for these hypotheses are:

- $\mathrm{P}\left(\mathrm{H}_1\right) = 8/9$
- $\mathrm{P}\left(\mathrm{H}_2\right) = 1/9$

Let $\mathbf{D}$ be the event that when you toss the coin twice, it lands tails both times.

What is the value of $P(D)$?

A. $1/9$
B. $1/3$
C. $2/9$
D. $4/9$

Your Answer: | Correct Answer: B | Not Attempted | Time taken: 00min 00sec | Discuss

Q #48 | Multiple Choice Type | Award: 2 | Penalty: 0.67 | Set Theory & Algebra

Let A and B be finite sets (sets whose cardinalities are natural numbers) and assume $|A| > |B|$. Which of the following statements are true?

A. If $f : A \to B$, then f is injective.
B. If $f : A \to B$, then f is not injective.
C. If $f : A \to B$, then f is surjective.
D. If $f : A \to B$, then f is not surjective.

Your Answer: | Correct Answer: B | Not Attempted | Time taken: 00min 00sec | Discuss

Q #49 | Multiple Select Type | Award: 2 | Penalty: 0 | Set Theory & Algebra

A set S is called "tiny" if the following properties hold for S :

1. There is at least one element $X \in S$.
2. For any $X \in S$, the object X is a set.
3. For any set $X \in S$ and any set Y where $Y \subseteq X$, we have $Y \in S$.
4. For any sets $X \in S$ and $Y \in S$, we have $X \cup Y \in S$.

Tiny sets have some interesting properties. Which of the following statements is/are true?

A. If S is a tiny set, then $\emptyset \in S$.
B. For any set S, the power set of S i.e. $P(S)$ is a tiny set.
C. If S and T are tiny sets, then $\mathrm{S} \cup \mathrm{T}$ is also a tiny set.
D. If S and T are tiny sets, then $\mathrm{S} \cap \mathrm{T}$ is also a tiny set.

Your Answer: | Correct Answer: A;B;D | Not Attempted | Time taken: 00min 00sec | Discuss

Q #50 | Multiple Select Type | Award: 2 | Penalty: 0 | Set Theory & Algebra

A binary relation R over a set A is called "weakly transitive" if the following is true about R:

$$\forall x \in A. \forall y \in A. \forall z \in A. \forall w \in A. (xRy \wedge yRz \wedge zRw \rightarrow xRw)$$

Which of the following options is/are correct?

A. All relations that are weakly transitive are transitive.
B. All relations that are transitive are weakly transitive.
C. If a relation R is reflexive and weakly transitive then R is transitive.
D. If a relation R is reflexive, symmetric, and weakly transitive, then it is an equivalence relation.

Your Answer: | Correct Answer: B;C;D | Not Attempted | Time taken: 00min 00sec | Discuss

Q #51 | Numerical Type | Award: 2 | Penalty: 0 | Graph Theory

You are in charge of packing volatile items $\{\mathrm{A}, \mathrm{B}, \mathrm{C}, \mathrm{D}, \mathrm{E}, \mathrm{F}, \mathrm{G}, \mathrm{H}, \mathrm{J}, \mathrm{K}\}$ into containers for shipping.

Due to the volatile nature of the items, some items could be in conflict with other items. Two items are in conflict with each other means that they cannot be packed together or bad things might happen.

You are given the conflict list below, which states, for each item, those items that it conflicts with.

For example, (from line 2) item B cannot be packed with A or C or D.

A: B, C;	**C:** A, B, D;	**E:** D, F, G, H;	**G:** E, H;	**J:** F, K;
B: A, C, D;	**D:** B, C, E, F;	**F:** D, E, J, K;	**H:** E, G;	**K:** F, J.

We want to pack these volatile items into containers so that no conflicting items are in the same container.

What is the minimum number of containers needed?

Your Answer: | Correct Answer: 3 | Not Attempted | Time taken: 00min 00sec | Discuss

Q #52 | Multiple Select Type | Award: 2 | Penalty: 0 | Theory of Computation

Which of the following languages is/are non-regular?

A. $L = \left\{0^k u 1^k \mid k \geq 1, u \in \Sigma^*\right\}$ over the alphabet $\Sigma = \{0, 1\}$
B. $L = \left\{0^k 1 u 1^k \mid k \geq 1, u \in \Sigma^*\right\}$ over the alphabet $\Sigma = \{0, 1\}$
C. $\{w \in \{a, b\}^* \mid$ no two consecutive characters in w are the same, and w has the same number of a's and b's $\}$
D. $L = \left\{a^i b^j c^k \mid i + j = k\right\}$ over the alphabet $\Sigma = \{a, b, c\}$

Your Answer: | Correct Answer: B;D | Not Attempted | Time taken: 00min 00sec | Discuss

Q #53 | Multiple Select Type | Award: 2 | Penalty: 0 | Theory of Computation

Which of the following languages is/are not Turing decidable?

A. $\mathrm{L}_1 := \{< \mathrm{M} >| \mathrm{M}$ is a TM that halts on all inputs and $\mathrm{L}(\mathrm{M}) = \mathrm{L}'$ for some undecidable language $\mathrm{L}'\}$.
B. $\mathrm{L}_2 := \{< \mathrm{M} >| \mathrm{M}$ is a TM, and M accepts (at least) two strings of different lengths $\}$.

C. $L_3 := \{< M >| \text{ M is a TM such that both } L(M) \text{ and complement of } L(M) \text{ are finite } \}$.
D. $L_4 := \{< M >| \text{ M is a TM with 300 states } \}$.

Your Answer: | Correct Answer: B | Not Attempted | Time taken: 00min 00sec | Discuss

Q #54 Multiple Select Type | Award: 2 | Penalty: 0 | Theory of Computation

Which of the following statements is/are false?

A. If a language L is generated by a context-free grammar that is not a regular grammar, then L must not be a regular language.
B. If a language L is accepted by a nondeterministic finite automaton, then there must be some push-down automaton(PDA) that also accepts L.
C. If L, M are two context-free languages, then $L \cap M$ is not context-free.
D. Every nondeterministic PDA can be transformed into an equivalent deterministic PDA.

Your Answer: | Correct Answer: A;C;D | Not Attempted | Time taken: 00min 00sec | Discuss

Q #55 Multiple Choice Type | Award: 2 | Penalty: 0.67 | Theory of Computation

What is the language over the alphabet $\{a, b\}$ that is accepted by the following PDA?

The PDA accepts by empty stack. Here, $\perp$ is the initial bottom marker for the stack.

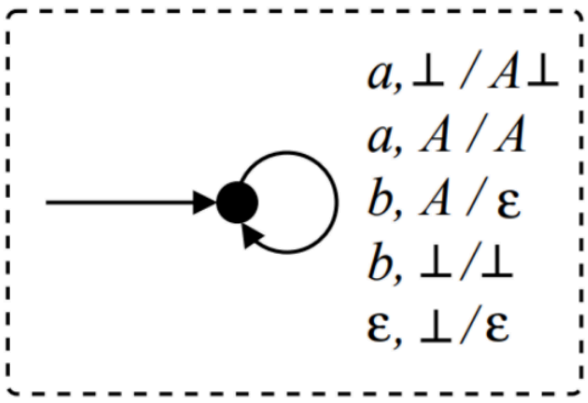

A. $\{a^n b^n \mid n > 0\}$
B. $\{a^m b^n \mid m, n \geq 0\}$
C. $\{a^m b^n \mid m, n \geq 1\}$
D. $\epsilon + (a + b)^* b$

Your Answer: | Correct Answer: D | Not Attempted | Time taken: 00min 00sec | Discuss

Copyright & Stuff